Elastomer Jaw Couplings
RINGFEDER® TNS S-BT
Coupling with standard hub and brake drum

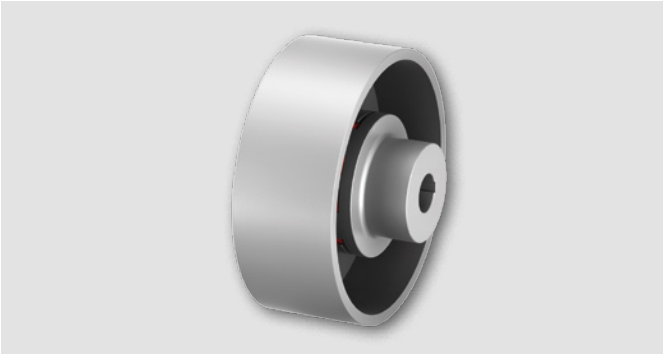

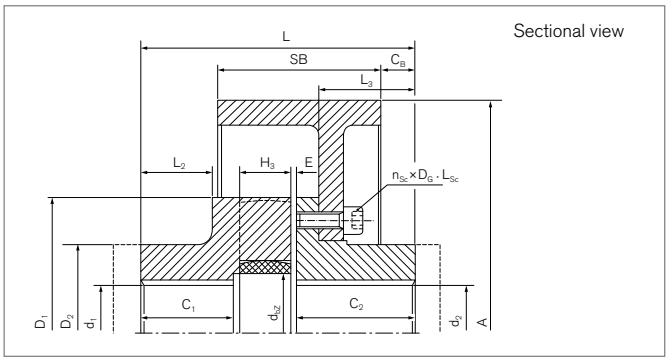

Identifier	Size	A	SB	T_{KN}	T_{Kmax}	T_{BR}	n_{max}	d_{1kmax}	d_{2kmax}	D_1	D_2	C_1	C_2	C_B
		mm	mm	Nm	Nm	Nm	1/min	mm	mm	mm	mm	mm	mm	mm
WS0510-200	100	200	75	130	390	260	4200	48	42	105	75	49,5	49,5	14
WS0512-200	125	200	75	250	750	310	4200	55	55	126	85	56,5	56,5	20
WS0514-200	145	200	75	400	1200	730	4200	65	65	145	95	61	61	21
WS0514-250	145	250	95	400	1200	730	3400	65	65	145	95	61	61	13
WS0517-250	170	250	95	630	1900	1200	3400	85	85	170	120	75	75	27
WS0517-315	170	315	118	630	1900	1350	2700	85	85	170	120	75	75	13
WS0520-315	200	315	118	1100	3300	2450	2700	95	95	200	135	99	99	38
WS0520-400	200	400	150	1100	3300	2650	2100	95	95	200	135	99	99	26
WS0523-400	230	400	150	1700	5150	3800	2100	105	105	230	150	110	110	36
WS0523-500	230	500	190	1700	5150	3800	1700	105	105	230	150	110	110	25
WS0526-500	260	500	190	2650	7950	9000	1700	125	125	260	180	112,5	112,5	25
WS0530-630	300	630	236	3900	11700	10500	1360	140	140	300	200	131,5	131,5	20
WS0530-710	300	710	265	3900	11700	11000	1200	140	140	300	200	131,5	131,5	0
WS0536-630	360	630	236	6500	19500	26000	1360	150	150	360	210	172	172	51
WS0536-710	360	710	265	6500	19500	26000	1200	150	150	360	210	172	172	34
WS0540-710	400	710	265	8900	26700	35000	1200	160	160	400	225	163,5	163,5	30

For further information see chapter „Introduction“ as well as chapter „Elastomer Jaw Couplings RINGFEDER® TNS Basic information“ in the Product Paper & Tech Paper „RINGFEDER® Elastomer Jaw Couplings“

To continue see next page

Elastomer Jaw Couplings RINGFEDER® TNS S-BT

Identifier	Size	C_B	L	L_2	L_3	E	F_E	H_3	d_{be}	Screws ISO 4762 - 8.8				Gw_{ub}
										n_{Sc}	D_G	L_{Sc}	T_A 1)	
		mm	mm	mm	mm	mm	mm	mm	mm		mm	mm	Nm	kg
WS0510-200	100	14	125	37,5	39,5	3	+ 2,0	20	42	6	8	20	25	9,4
WS0512-200	125	20	145	44	45,5	3.5	+ 2,5	25	54	6	8	20	25	12,0
WS0514-200	145	21	160	47,5	48,5	4	+ 2,5	30	66	6	10	25	49	15,2
WS0514-250	145	13	160	47,5	48,5	4	+ 2,5	30	66	6	10	25	49	19,8
WS0517-250	170	27	190	60,5	62	5	+ 3,0	30	90	8	10	25	49	26,7
WS0517-315	170	13	190	60,5	62	5	+ 3,0	30	90	8	10	30	49	36,1
WS0520-315	200	38	245	79,5	84	6	+ 3,0	35	100	8	12	30	85	48,0
WS0520-400	200	26	245	79,5	84	6	+ 3,0	35	100	8	12	35	85	64,6
WS0523-400	230	36	270	88,5	93	7	+ 3,5	35	115	10	12	35	85	75,8
WS0523-500	230	25	270	88,5	93	7	+ 3,5	35	115	10	12	35	85	103,1
WS0526-500	260	25	285	88,5	91	7	+ 4,0	45	150	10	16	40	210	121,6
WS0530-630	300	20	330	107,5	110,5	7	+ 4,0	50	162	10	16	45	210	199,4
WS0530-710	300	0	330	107,5	110,5	7	+ 4,0	50	162	10	16	50	210	255,9
WS0536-630	360	51	417	140	144	8	+ 4,0	55	215	12	20	50	425	261,0
WS0536-710	360	34	417	140	144	8	+ 4,0	55	215	12	20	55	425	304,5
WS0540-710	400	30	400	137	141	7.5	+ 4,0	55	250	14	20	50	425	317,6

Explanation

A = Max. outer diameter
SB = Disc width
T_{KN} = Nom. Transmissible torque
T_{Kmax} = Max. transmissible torque of the coupling
T_{BR} = Brake torque
n_{max} = Max. rotation speed
d_{1kmax} = Max. bore diameter d_1 with keyway acc. to DIN 6885-1
d_{2kmax} = Max. bore diameter d_2 with keyway acc. to DIN 6885-1
D_1 = Outer diameter
D_2 = Outer diameter hub
C_1 = Guided length in hub bore
C_1 = Guided length in hub bore
C_B = Brake disc distance
L = Total length
L_2 = Length on the hub
L_3 = Length
E = Gap width between left and right component
F_E = Tolerance of the gap width E
H_3 = Length of damping module
d_{be} = Inner diameter elastic intermediate ring
n_{Sc} = Quantity of screws
D_G = Thread
L_{Sc} = Screw length
F_{Sc} = Screw strength class
T_A = Max tightened torque of the clamping screws
Gw_{ub} = Weight, unbored

Ordering example

Identifier	Size	d_{1k}	d_{2k}	Further details
WS0523-400	**230**	**105**	**105**	*

*) Without any other specification, we deliver as a standard: with set screws and keyway acc. to DIN 6885-1, keyway side fit P9, bore tolerance H7

Further information on
RINGFEDER® TNS S-BT
on **www.ringfeder.com**

Disclaimer of liability
All technical details and notes are non-binding and cannot be used as a basis for legal claims. The user is obligated to determine whether the represented products meet his requirements. We reserve the right carry out modifications at any time in the interests of technical progress.

RINGFEDER POWER TRANSMISSION

Elastomer Jaw Couplings

RINGFEDER® TNS SDD-5

Coupling with detachable claw rings

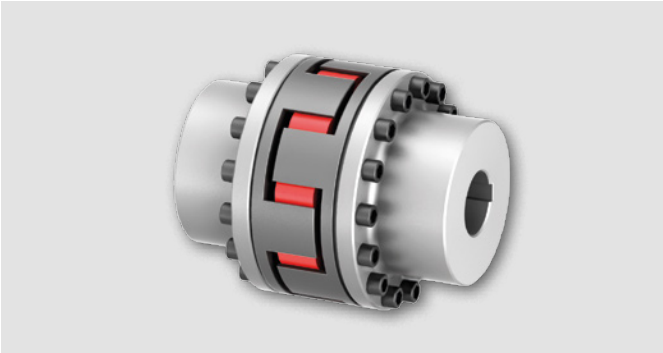

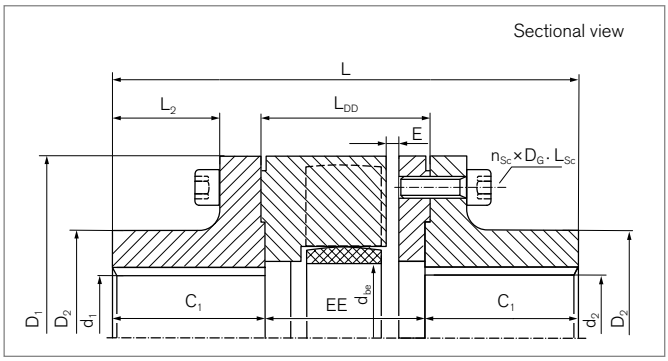

Identifier	Size	T_{KN}	T_{Kmax}	n_{max}	d_{1kmax}	d_{2kmax}	D_1	D_2	C_1	L	L_2
		Nm	Nm	1/min	mm	mm	mm	mm	mm	mm	mm
WS0710	100	130	390	7250	45	45	105	65	49	150	37,5
WS0712	125	250	750	6000	55	55	126	80	56	170	42,5
WS0714	145	400	1200	5250	65	65	145	92	60,5	189	44
WS0717	170	630	1900	4500	75	75	170	110	74,5	217	58
WS0720	200	1100	3300	3750	95	95	200	135	98,5	274	82
WS0723	230	1700	5150	3250	110	110	230	160	110	301	90
WS0726	260	2650	7950	3000	125	125	260	180	112,5	321	88
WS0730	300	3900	11700	2500	140	140	300	200	131,5	376	105
WS0736	360	6500	19500	2150	160	160	360	225	172	469	142,5
WS0740	400	8900	26700	1900	160	160	400	225	172	469	142,5

Identifier	Size	L_{DD}	E	F_E	EE	d_{be}	Screws ISO 4762 - 8.8				Gw_{ub}
							n_{Sc}	D_G	L_{Sc}	T_A	
		mm	mm	mm	mm	mm		mm	mm	Nm	kg
WS0710	100	55	5	+ 2,0	52	42	9	8	20	25	5,3
WS0712	125	61	5	+ 2,5	58	54	9	10	25	49	8,8
WS0714	145	71	5	+ 2,5	68	66	9	12	30	85	13,3
WS0717	170	71	5	+ 3,0	68	90	12	12	30	85	19,9
WS0720	200	81	6	+ 3,0	77	100	12	14	30	135	35,3
WS0723	230	86	7	+ 3,5	81	115	15	14	35	135	52,5
WS0726	260	101	8	+ 4,0	96	150	15	16	40	210	71,5
WS0730	300	118	8	+ 4,0	113	162	15	20	50	425	109,0
WS0736	360	130	8	+ 4,0	125	215	12	24	55	730	179,8
WS0740	400	130	8	+ 4,0	125	250	14	24	55	730	197,7

For further information see chapter „Introduction“ as well as chapter „Elastomer Jaw Couplings RINGFEDER® TNS Basic information“ in the Product Paper & Tech Paper „RINGFEDER® Elastomer Jaw Couplings“

To continue see next page

Elastomer Jaw Couplings RINGFEDER® TNS SDD-5

Explanation

T_{KN}	= Nom. Transmissible torque	D_2	= Outer diameter hub	d_{be}	= Inner diameter elastic intermediate ring
T_{Kmax}	= Max. transmissible torque of the coupling	C_1	= Guided length in hub bore	n_{Sc}	= Quantity of screws
n_{max}	= Max. rotation speed	L	= Total length	D_G	= Thread
d_{1kmax}	= Max. bore diameter d_1 with keyway acc. to DIN 6885-1	L_2	= Length on the hub	L_{Sc}	= Screw length
d_{2kmax}	= Max. bore diameter d_2 with keyway acc. to DIN 6885-1	L_{DD}	= Distance dimension	F_{Sc}	= Screw strength class
D_1	= Outer diameter	E	= Gap width between left and right component	T_A	= Max tightened torque of the clamping screws
		F_E	= Tolerance of the gap width E	Gw_{ub}	= Weight, unbored
		EE	= Distance of the hubs		

Ordering example

Identifier	Size	d_{1k}	d_{2k}	Further details
WS0723	230	110	110	*

*) Without any other specification, we deliver as a standard: with set screws and keyway acc. to DIN 6885-1, keyway side fit P9, bore tolerance H7

Further information on
RINGFEDER® TNS SDD-5
on **www.ringfeder.com**

Disclaimer of liability
All technical details and notes are non-binding and cannot be used as a basis for legal claims. The user is obligated to determine whether the represented products meet his requirements. We reserve the right carry out modifications at any time in the interests of technical progress.

RINGFEDER POWER TRANSMISSION

Elastomer Jaw Couplings

RINGFEDER® TNS SDDL-5

Coupling with detachable claw rings and long flange hubs

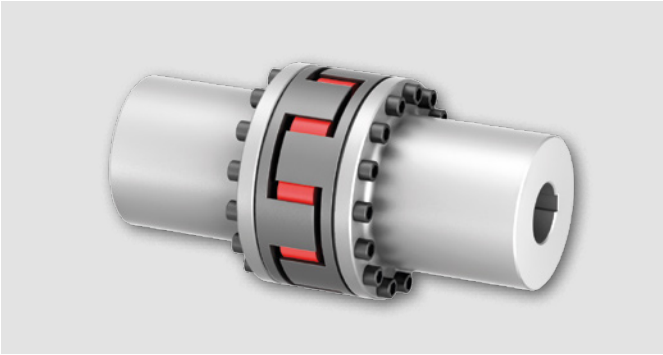

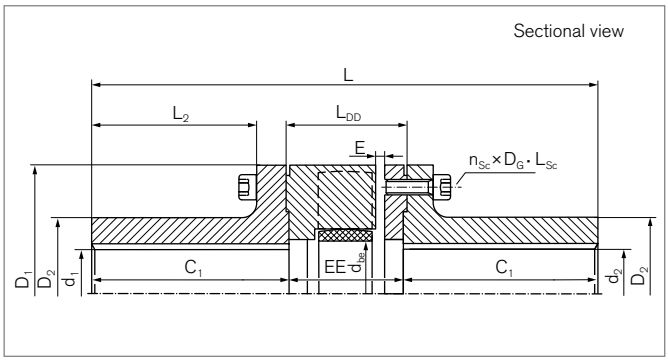

Identifier	Size	T_{KN}	T_{Kmax}	n_{max}	d_{1kmax}	d_{2kmax}	D_1	D_2	C_1	L	L_2
		Nm	Nm	1/min	mm	mm	mm	mm	mm	mm	mm
WS0710-L	100	130	390	7250	45	45	105	65	110	272	98,5
WS0712-L	125	250	750	6000	55	55	126	80	110	278	96,5
WS0714-L	145	400	1200	5250	65	65	145	92	110	288	93,5
WS0717-L	170	630	1900	4500	75	75	170	110	140	348	123,5
WS0720-L	200	1100	3300	3750	95	95	200	135	170	417	153,5
WS0723-L	230	1700	5150	3250	110	110	230	160	170	421	150
WS0726-L	260	2650	7950	3000	125	125	260	180	210	516	185,5
WS0730-L	300	3900	11700	2500	140	140	300	200	210	533	183,5
WS0736-L	360	6500	19500	2150	160	160	360	225	250	625	220,5
WS0740-L	400	8900	26700	1900	160	160	400	225	250	625	220,5

Identifier	Size	L_{DD}	E	F_E	EE	d_{be}	Screws ISO 4762 - 8.8				Gw_{ub}
							n_{Sc}	D_G	L_{Sc}	T_A	
		mm	mm	mm	mm	mm		mm	mm	Nm	kg
WS0710-L	100	55	5	+ 2,0	52	42	9	8	20	25	8,5
WS0712-L	125	61	5	+ 2,5	58	54	9	10	25	49	13,1
WS0714-L	145	71	5	+ 2,5	68	66	9	12	30	85	18,5
WS0717-L	170	71	5	+ 3,0	68	90	12	12	30	85	29,7
WS0720-L	200	81	6	+ 3,0	77	100	12	14	30	135	51,3
WS0723-L	230	86	7	+ 3,5	81	115	15	14	35	135	71,4
WS0726-L	260	101	8	+ 4,0	96	150	15	16	40	210	110,5
WS0730-L	300	118	8	+ 4,0	113	162	15	20	50	425	147,8
WS0736-L	360	130	8	+ 4,0	125	215	12	24	55	730	228,5
WS0740-L	400	130	8	+ 4,0	125	250	14	24	55	730	246,3

For further information see chapter „Introduction“ as well as chapter „Elastomer Jaw Couplings RINGFEDER® TNS Basic information“ in the Product Paper & Tech Paper „RINGFEDER® Elastomer Jaw Couplings“

To continue see next page

Elastomer Jaw Couplings RINGFEDER® TNS SDDL-5

Explanation

T_{KN}	= Nom. Transmissible torque	D_2	= Outer diameter hub	d_{be}	= Inner diameter elastic intermediate ring
T_{Kmax}	= Max. transmissible torque of the coupling	C_1	= Guided length in hub bore	n_{Sc}	= Quantity of screws
n_{max}	= Max. rotation speed	L	= Total length	D_G	= Thread
d_{1kmax}	= Max. bore diameter d_1 with keyway acc. to DIN 6885-1	L_2	= Length on the hub	L_{Sc}	= Screw length
d_{2kmax}	= Max. bore diameter d_2 with keyway acc. to DIN 6885-1	L_{DD}	= Distance dimension	F_{Sc}	= Screw strength class
D_1	= Outer diameter	E	= Gap width between left and right component	T_A	= Max tightened torque of the clamping screws
		F_E	= Tolerance of the gap width E	Gw_{ub}	= Weight, unbored
		EE	= Distance of the hubs		

Ordering example

Identifier	Size	d_{1k}	d_{2k}	Further details
WS0726-L	260	125	125	*

*) Without any other specification, we deliver as a standard: with set screws and keyway acc. to DIN 6885-1, keyway side fit P9, bore tolerance H7

Further information on
RINGFEDER® TNS SDDL-5
on **www.ringfeder.com**

Disclaimer of liability
All technical details and notes are non-binding and cannot be used as a basis for legal claims. The user is obligated to determine whether the represented products meet his requirements. We reserve the right carry out modifications at any time in the interests of technical progress.

RINGFEDER POWER TRANSMISSION

Elastomer Jaw Couplings

RINGFEDER® TNS SDDL-5-BS

Coupling with detachable claw rings, long hubs and brake disc

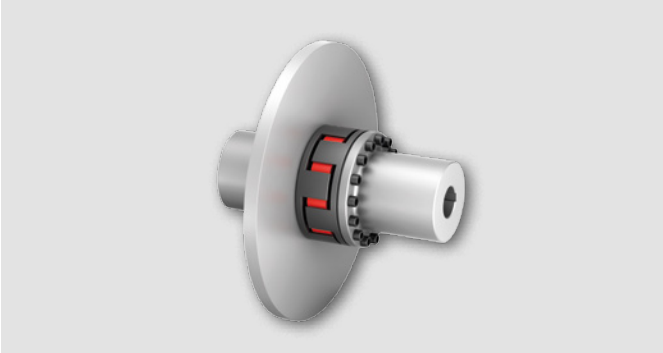

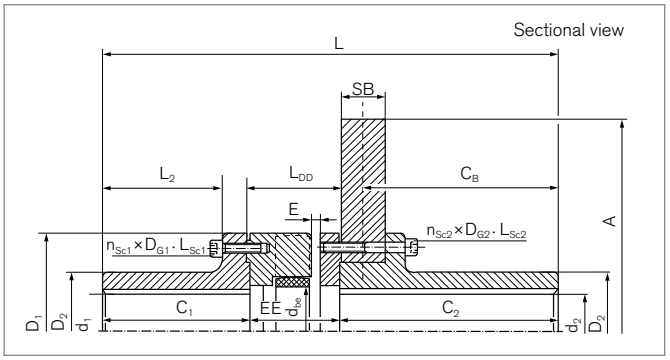

Identifier	Size	A	SB	$T_{KN\ Vk60D}$	$T_{Kmax\ Vk60D}$	n_{max}	d_{1kmax}	d_{2kmax}	D_1	D_2	C_1	C_2	C_B	L	L_2
		mm	mm	Nm	Nm	1/min	mm	mm	mm	mm	mm	mm	mm	mm	mm
WS5114-0355-30	145	355	30	600	1800	4800	65	65	145	92	110	166,5	150	344,5	93,5
WS5114-0400-30		400	30			4300		65					150	344,5	
WS5117-0400-30	170	400	30	950	2850	4300	75	75	170	110	140	166,5	150	374,5	123,5
WS5117-0450-30		450	30			3750		75					150	374,5	
WS5117-0500-30		500	30			3400		75					150	374,5	
WS5120-0450-30	200	450	30	1650	4950	3750	95	95	200	135	170	207	190	454	153,5
WS5120-0500-30		500	30			3400		95					190	454	
WS5120-0560-30		560	30			3000		95					190	454	
WS5123-0500-30	230	500	30	2580	7740	3250	110	110	230	160	170	207,5	190	458,5	150
WS5123-0560-30		560	30			3000		110					190	458,5	
WS5123-0630-30		630	30			2700		110					190	458,5	
WS5123-0710-30		710	30			2400		110					190	458,5	
WS5126-0630-30	260	630	30	3980	11940	2700	125	125	260	180	210	212,5	195	518,5	185,5
WS5126-0710-30		710	30			2400		125					195	518,5	
WS5130-0710-30	300	710	30	5850	17550	2400	140	140	300	200	210	212,5	195	535,5	183,5
WS5130-0800-30		800	30			2150		140					195	535,5	
WS5130-0800-40		800	40			2150		140					190	535,5	
WS5136-0800-30	360	800	30	9700	29100	2150	160	160	360	225	250	252,5	235	627,5	220,5
WS5136-0800-40		800	40			2150		160					230	627,5	
WS5136-1000-40		1000	40			1700		160					230	627,5	
WS5140-0800-30	400	800	30	13350	40050	1900	160	160	400	225	250	252,5	235	627,5	220,5
WS5140-0800-40		800	40			1900		160					230	627,5	
WS5140-1000-40		1000	40			1700		160					230	627,5	

For further information see chapter „Introduction“ as well as chapter „Elastomer Jaw Couplings RINGFEDER® TNS Basic information“ in the Product Paper & Tech Paper „RINGFEDER® Elastomer Jaw Couplings“

To continue see next page

Elastomer Jaw Couplings RINGFEDER® TNS SDDL-5-BS

Identifier	Size	L_{DD}	E	F_E	EE	d_{be}	Screws ISO 4762 - 8.8								Gw_{ub}
							n_{Sc1}	D_{G1}	L_{Sc1}	T_{A1}	n_{Sc2}	D_{G2}	L_{Sc2}	T_{A2}	
		mm	mm	mm	mm	mm		mm	mm	Nm		mm	mm	Nm	kg
WS5114-0355-30	145	71	5	+ 2,5	68	66	9	M12	30	85	9	M12	60	85	43,0
WS5114-0400-30					68						9	M12	60	85	49,3
WS5117-0400-30	170	71	5	+ 3,0	68	90	12	M12	30	85	12	M12	70	85	59,9
WS5117-0450-30					68						12	M12	70	85	67,7
WS5117-0500-30					68						12	M12	70	85	76,5
WS5120-0450-30	200	81	6	+ 3,0	77	100	12	M14	30	135	12	M14	60	135	59,9
WS5120-0500-30					77						12	M14	60	135	98,1
WS5120-0560-30					77						12	M14	60	135	109,9
WS5123-0500-30	230	86	7	+ 3,5	81	115	15	M14	35	135	15	M14	65	135	118,6
WS5123-0560-30					81						15	M14	65	135	130,3
WS5123-0630-30					81						15	M14	65	135	145,8
WS5123-0710-30					81						15	M14	65	135	165,6
WS5126-0630-30	260	101	8	+ 4,0	96	150	15	M16	40	210	15	M16	70	210	178,1
WS5126-0710-30					96						15	M16	70	210	198,0
WS5130-0710-30	300	118	8	+ 4,0	113	162	15	M20	50	425	15	M20	80	425	233,7
WS5130-0800-30					113						15	M20	80	425	258,8
WS5130-0800-40					113						15	M20	90	425	295,7
WS5136-0800-30	360	130	8	+ 4,0	125	215	12	M24	55	730	12	M24	85	730	337,7
WS5136-0800-40					125						12	M24	95	730	374,0
WS5136-1000-40					125						12	M24	95	730	462,7
WS5140-0800-30	400	130	8	+ 4,0	125	250	14	M24	55	730	14	M24	85	730	355,5
WS5140-0800-40					125						14	M24	95	730	391,8
WS5140-1000-40					125						14	M24	95	730	480,5

To continue see next page

Elastomer Jaw Couplings RINGFEDER® TNS SDDL-5-BS

Explanation

A	= Max. outer diameter	**D_2**	= Outer diameter hub	**d_{be}**	= Inner diameter elastic intermediate ring
SB	= Disc width	**C_1**	= Guided length in hub bore	**n_{Sc1}**	= Quantity of screws D_{G1}
$T_{KN\ Vk60D}$	= Nom. coupling torque when using the flexible element VK60D	**C_2**	= Guided length in hub bore	**D_{G1}**	= Thread
$T_{Kmax\ Vk60D}$	= Max. transmittable torque of the coupling when using the flexible element VK60D	**C_B**	= Brake disc distance	**L_{Sc1}**	= Length of screw D_{G1}
n_{max}	= Max. rotation speed	**L**	= Total length	**T_{A1}**	= Tightened torque of clamping screw D_{G1}
d_{1kmax}	= Max. bore diameter d_1 with keyway acc. to DIN 6885-1	**L_2**	= Length on the hub	**n_{Sc2}**	= Quantity of screws D_{G2}
d_{2kmax}	= Max. bore diameter d_2 with keyway acc. to DIN 6885-1	**L_{DD}**	= Distance dimension	**D_{G2}**	= Thread
D_1	= Outer diameter	**E**	= Gap width between left and right component	**L_{Sc2}**	= Length of screw D_{G2}
		F_E	= Tolerance of the gap width E	**T_{A2}**	= Tightened torque of clamping screw D_{G2}
		EE	= Distance of the hubs	**F_{Sc}**	= Screw strength class
				Gw_{ub}	= Weight, unbored

Ordering example

Identifier	Size	d_{1k}	d_{2k}	Further details
WS5120-0450-30	200	95	95	*

*) Without any other specification, we deliver as a standard: with set screws and keyway acc. to DIN 6885-1, keyway side fit P9, bore tolerance H7

Further information on
RINGFEDER® TNS SDDL-5-BS
on **www.ringfeder.com**

Disclaimer of liability
All technical details and notes are non-binding and cannot be used as a basis for legal claims. The user is obligated to determine whether the represented products meet his requirements. We reserve the right carry out modifications at any time in the interests of technical progress.

Elastomer Jaw Couplings
RINGFEDER® TNS S-LSt
Coupling with extended hubs

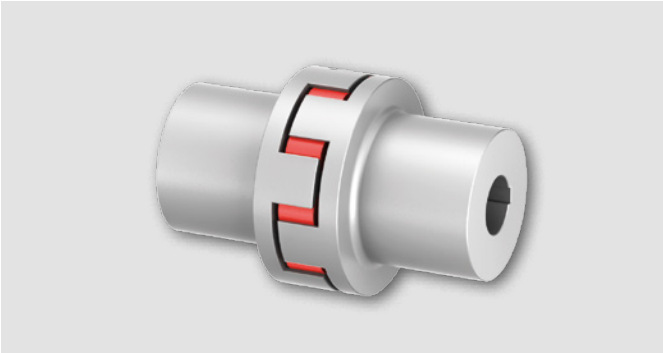

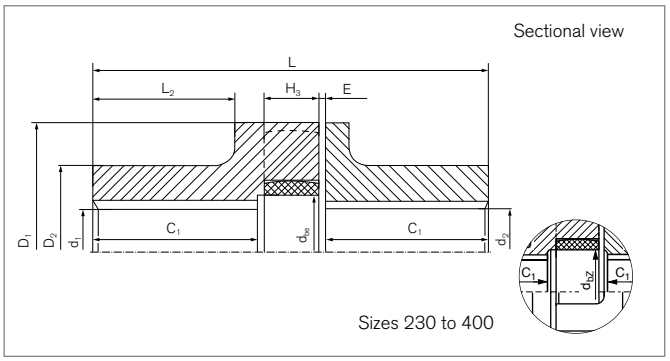

Identifier	Size	T_{KN}	T_{Kmax}	n_{max}	d_{1kmax}	d_{2kmax}	D_1	D_2	C_1
		Nm	Nm	1/min	mm	mm	mm	mm	mm
WS0105-L	50	15	40	15000	25	25	50	42	40,5
WS0108-L	85	75	225	9000	40	40	85	60	80,5
WS0110-L	100	130	390	7250	42	42	105	65	80,5
WS0112-L	125	250	750	6000	55	55	126	85	110,5
WS0114-L	145	400	1200	5250	65	65	145	95	110,5
WS0117-L	170	630	1900	4500	85	85	170	120	140,5
WS0120-L	200	1100	3300	3750	95	95	200	135	140
WS0123-L	230	1700	5150	3250	105	105	230	150	170
WS0126-L	260	2650	7950	3000	125	125	260	180	170
WS0140-L	400	8900	26700	1900	160	160	400	225	183,5

Identifier	Size	L	L_2	E	F_E	H_3	d_{be}	Gw_{ub}
		mm	mm	mm	mm	mm	mm	kg
WS0105-L	50	96	34	1,5	+ 1,0	12	19	1,0
WS0108-L	85	184	72	2,5	+ 2,0	18	38	4,3
WS0110-L	100	187	68,5	3	+ 2,0	20	42	5,8
WS0112-L	125	253	98	3,5	+ 2,5	25	54	12,3
WS0114-L	145	259	97	4	+ 2,5	30	66	16,1
WS0117-L	170	321	126	5	+ 3,0	30	90	29,6
WS0120-L	200	328	124	6	+ 3,0	35	100	39,6
WS0123-L	230	390	151	7	+ 3,5	35	115	59,0
WS0126-L	260	400	146	7	+ 4,0	45	150	85,3
WS0140-L	400	440	157	7,5	+ 4,0	55	250	173,0

For further information see chapter „Introduction“ as well as chapter „Elastomer Jaw Couplings RINGFEDER® TNS Basic information“ in the Product Paper & Tech Paper „RINGFEDER® Elastomer Jaw Couplings“

To continue see next page

Elastomer Jaw Couplings RINGFEDER® TNS S-LSt

Explanation

T_{KN}	= Nom. Transmissible torque	D_1	= Outer diameter	F_E	= Tolerance of the gap width E
T_{Kmax}	= Max. transmissible torque of the coupling	D_2	= Outer diameter hub	H_3	= Length of damping module
n_{max}	= Max. rotation speed	C_1	= Guided length in hub bore	d_{be}	= Inner diameter elastic intermediate ring
d_{1kmax}	= Max. bore diameter d_1 with keyway acc. to DIN 6885-1	L	= Total length	Gw_{ub}	= Weight, unbored
d_{2kmax}	= Max. bore diameter d_2 with keyway acc. to DIN 6885-1	L_2	= Length on the hub		
		E	= Gap width between left and right component		

Ordering example

Identifier	Size	d_{1k}	d_{2k}	Further details
WS0117-L	170	85	85	*

*) Without any other specification, we deliver as a standard: with set screws and keyway acc. to DIN 6885-1, keyway side fit P9, bore tolerance H7

Further information on
RINGFEDER® TNS S-LSt
on **www.ringfeder.com**

Disclaimer of liability
All technical details and notes are non-binding and cannot be used as a basis for legal claims. The user is obligated to determine whether the represented products meet his requirements. We reserve the right carry out modifications at any time in the interests of technical progress.

RINGFEDER POWER TRANSMISSION

Elastomer Jaw Couplings
RINGFEDER® TNS S-St
Coupling with standard hubs

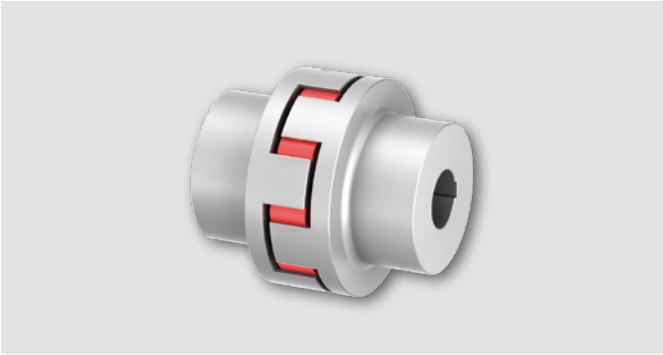

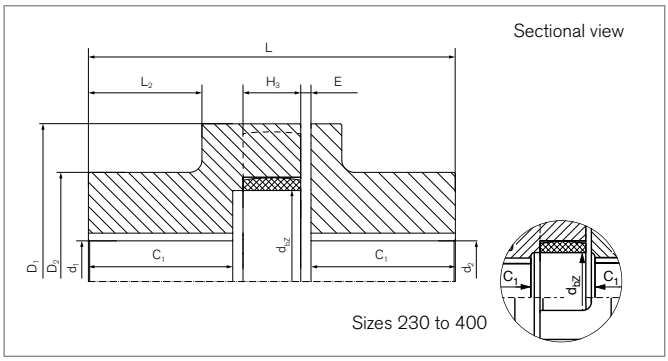

Identifier	Size	T_{KN}	T_{Kmax}	n_{max}	d_{1kmax}	d_{2kmax}	D_1	D_2	C_1
		Nm	Nm	1/min	mm	mm	mm	mm	mm
WS0105	50	15	40	15000	25	25	50	41	30
WS0107	70	55	160	11000	38	38	70	55	38,5
WS0108	85	75	225	9000	40	40	85	60	43,5
WS0110	100	130	390	7250	48	48	105	75	49,5
WS0112	125	250	750	6000	55	55	126	85	56,5
WS0114	145	400	1200	5250	65	65	145	95	61
WS0117	170	630	1900	4500	85	85	170	120	75
WS0120	200	1100	3300	3750	95	95	200	135	99
WS0123	230	1700	5150	3250	105	105	230	150	110
WS0126	260	2650	7950	3000	125	125	260	180	112,5
WS0130	300	3900	11700	2500	140	140	300	200	131,5
WS0136	360	6500	19500	2150	150	150	360	210	172
WS0140	400	8900	26700	1900	160	160	400	225	163,5

Identifier	Size	L	L_2	E	F_E	H_3	d_{be}	Gw_{ub}
		mm	mm	mm	mm	mm	mm	kg
WS0105	50	75	23,5	1,5	+ 1,0	12	19	0,8
WS0107	70	100	31,5	2,5	+ 1,5	18	26	1,8
WS0108	85	110	35	2,5	+ 2,0	18	38	2,7
WS0110	100	125	37,5	3	+ 2,0	20	42	4,9
WS0112	125	145	44	3,5	+ 2,5	25	54	7,5
WS0114	145	160	47,5	4	+ 2,5	30	66	10,6
WS0117	170	190	60,5	5	+ 3,0	30	90	18,0
WS0120	200	245	79,5	6	+ 3,0	35	100	31,0
WS0123	230	270	88,5	7	+ 3,5	35	115	43,5
WS0126	260	285	88,5	7	+ 4,0	45	150	63,0
WS0130	300	330	107,5	7	+ 4,0	50	162	91,5
WS0136	360	417	140	8	+ 4,0	55	215	146,2
WS0140	400	400	137	7,5	+ 4,0	55	250	160,4

For further information see chapter „Introduction“ as well as chapter „Elastomer Jaw Couplings RINGFEDER® TNS Basic information“ in the Product Paper & Tech Paper „RINGFEDER® Elastomer Jaw Couplings“

To continue see next page

Elastomer Jaw Couplings RINGFEDER® TNS S-St

Explanation

T_{KN}	= Nom. Transmissible torque	D_1	= Outer diameter	H_3	= Length of damping module
T_{Kmax}	= Max. transmissible torque of the coupling	D_2	= Outer diameter hub	d_{be}	= Inner diameter elastic intermediate ring
n_{max}	= Max. rotation speed	C_1	= Guided length in hub bore	Gw_{ub}	= Weight, unbored
d_{1kmax}	= Max. bore diameter d_1 with keyway acc. to DIN 6885-1	L	= Total length		
d_{2kmax}	= Max. bore diameter d_2 with keyway acc. to DIN 6885-1	L_2	= Length on the hub		
		E	= Gap width between left and right component		
		F_E	= Tolerance of the gap width E		

Ordering example

Identifier	Size	d_{1k}	d_{2k}	Further details
WS0117	170	85	85	*

*) Without any other specification, we deliver as a standard: with set screws and keyway acc. to DIN 6885-1, keyway side fit P9, bore tolerance H7

Further information on
RINGFEDER® TNS S-St
on **www.ringfeder.com**

Disclaimer of liability
All technical details and notes are non-binding and cannot be used as a basis for legal claims. The user is obligated to determine whether the represented products meet his requirements. We reserve the right carry out modifications at any time in the interests of technical progress.

Elastomer Jaw Couplings
RINGFEDER® TNS SV
Coupling with inner hub and claw flange

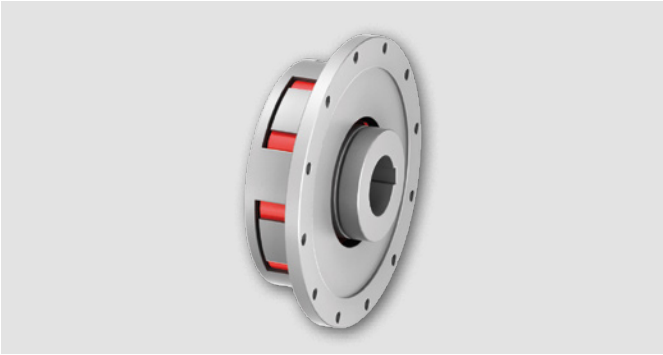

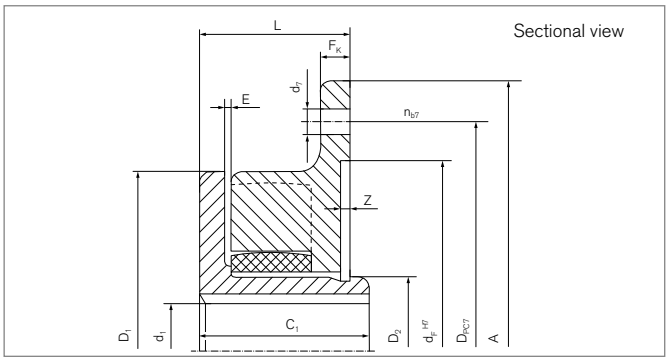

Identifier	Size	T_{KN}	T_{Kmax}	n_{max}	d_{1kmax}	A	D_1	D_2	C_1	F_K
		Nm	Nm	1/min	mm	mm	mm	mm	mm	mm
WS1410	100	70	210	7250	27	145	105	38	50	10
WS1412	125	128	385	6000	34	170	126	48	57	10
WS1414	145	220	660	5250	42	194	145	60	65	12
WS1417	170	340	1020	4500	58	220	170	82	75	14
WS1420	200	590	1770	3750	65	250	200	95	85	14
WS1423	230	900	2700	3250	70	290	230	102	90	14
WS1426	260	1400	4200	3000	90	335	260	130	110	18
WS1430	300	2090	6270	2500	105	385	300	147	130	24
WS1436-0650	360	3450	10350	2150	140	455	360	210	175	28
WS1436-0750		3450				514				30
WS1440	400	4750	14250	1900	160	514	400	230	180	30
WS1440-0866		4750				595				30

For further information see chapter „Introduction“ as well as chapter „Elastomer Jaw Couplings RINGFEDER® TNS Basic information“ in the Product Paper & Tech Paper „RINGFEDER® Elastomer Jaw Couplings“

To continue see next page

Elastomer Jaw Couplings RINGFEDER® TNS SV

Identifier	Size	Z	d_F	D_{PC7}	n_{b7}	d_7	L	E	d_{be}	Gw_{ub}
		mm	mm	mm		mm	mm	mm	mm	kg
WS1410	100	2	100	128	6	9	42	2	42	1,7
WS1412	125	2	130	148	6	9	47	2	54	2,8
WS1414	145	4	150	172	6	9	55	2	66	4,3
WS1417	170	4	170	195	6	13,5	60	2,5	90	6,8
WS1420	200	4	195	228	8	13,5	65	2,5	100	10,4
WS1423	230	4	220	265	8	13,5	70	4,5	115	13,4
WS1426	260	4	265	310	12	13,5	85,5	4,5	150	22,8
WS1430	300	4	315	360	16	13,5	100	4,5	162	36,2
WS1436-0650	360	5	360	420	16	17,5	123	7,5	215	71,4
WS1436-0750		5	420	480	20	17,5	125		215	75,4
WS1440	400	5	420	480	20	17,5	125	7,5	250	94,9
WS1440-0866		6	485	555	12	22	125		250	99,5

Explanation

- T_{KN} = Nom. Transmissible torque
- T_{Kmax} = Max. transmissible torque of the coupling
- n_{max} = Max. rotation speed
- d_{1kmax} = Max. bore diameter d_1 with keyway acc. to DIN 6885-1
- A = Max. outer diameter
- D_1 = Outer diameter
- D_2 = Outer diameter hub
- C_1 = Guided length in hub bore
- F_K = Guided length in hub bore
- Z = Depth of center value
- d_F = Center diameter
- D_{PC7} = Pitch circle diameter of bore holes d_7
- n_{b7} = Quantity of bore d_7
- d_7 = Bore diameter
- L = Total length
- E = Gap width between left and right component
- d_{be} = Inner diameter elastic intermediate ring
- Gw_{ub} = Weight, unbored

Ordering example

Identifier	Size	d_{1k}	Further details
WS1436-0750	**360**	**140**	*

*) Without any other specification, we deliver as a standard: with set screws and keyway acc. to DIN 6885-1, keyway side fit P9, bore tolerance H7

Further information on
RINGFEDER® TNS SV
on **www.ringfeder.com**

Disclaimer of liability
All technical details and notes are non-binding and cannot be used as a basis for legal claims. The user is obligated to determine whether the represented products meet his requirements. We reserve the right carry out modifications at any time in the interests of technical progress.

Elastomer Jaw Couplings
RINGFEDER® TNS SX
Coupling with standard hub and claw flange

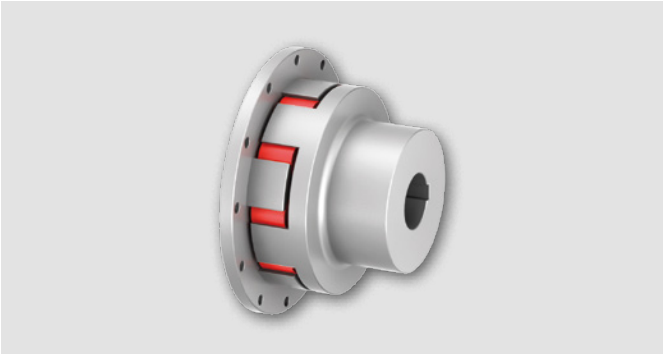

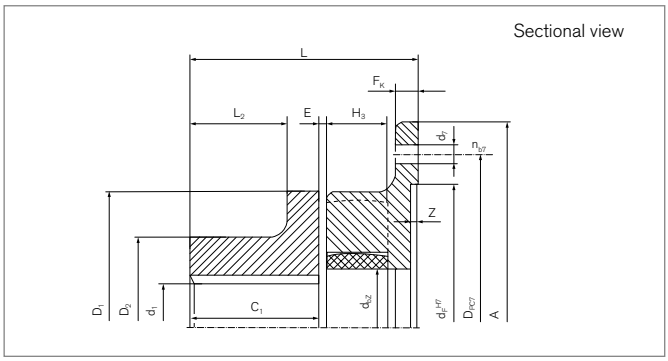

Identifier	Size	T_{KN}	T_{Kmax}	n_{max}	d_{1kmax}	A	D_1	D_2	C_1	F_K
		Nm	Nm	1/min	mm	mm	mm	mm	mm	mm
WS1010	100	70	210	7250	48	145	105	75	49,5	10
WS1012	125	128	385	6000	55	170	126	85	56,5	10
WS1014	145	220	660	5250	65	194	145	95	61	12
WS1017	170	340	1020	4500	85	220	170	120	75	14
WS1020	200	590	1770	3750	95	250	200	135	99	14
WS1023	230	900	2700	3250	105	290	230	150	110	14
WS1026	260	1400	4200	3000	125	335	260	180	112,5	18
WS1030	300	2090	6270	2500	140	385	300	200	131,5	24
WS1036-0650	360	3450	10350	2150	150	455	360	210	172	28
WS1036-0750		3450				514				30
WS1040	400	4750	14250	1900	160	514	400	225	163,5	30
WS1040-0866		4750				595				30
WS1040-L	400-L	4750	14250	1900	160	514	400	225	183,5	30
WS1040-L-0866		4750				595				30

For further information see chapter „Introduction“ as well as chapter „Elastomer Jaw Couplings RINGFEDER® TNS Basic information“ in the Product Paper & Tech Paper „RINGFEDER® Elastomer Jaw Couplings“

To continue see next page

Elastomer Jaw Couplings RINGFEDER® TNS SX

Identifier	Size	Z	d_F	D_{PC7}	n_{b7}	d_7	L	L_2	E	H_3	d_{be}	Gw_{ub}
		mm	mm	mm		mm	mm	mm	mm	mm	mm	kg
WS1010	100	2	100	128	6	9	84,5	37,5	3	20	42	2,9
WS1012	125	2	130	148	6	9	97	44	3,5	25	54	4,5
WS1014	145	4	150	172	6	9	109	47,5	4	30	66	6,4
WS1017	170	4	170	195	6	13,5	126,5	60,5	5	30	90	10,4
WS1020	200	4	195	228	8	13,5	156,5	79,5	6	35	100	17,5
WS1023	230	4	220	265	8	13,5	171	88,5	7	35	115	24,4
WS1026	260	4	265	310	12	13,5	188	88,5	7	45	150	35,9
WS1030	300	4	315	360	16	13,5	218,5	107,5	7	50	162	53,2
WS1036-0650	360	5	360	420	16	17,5	271,5	140	8	55	215	84,4
WS1036-0750		5	420	480	20	17,5	273,5					84,4
WS1040	400	5	420	480	20	17,5	265	137	7,5	55	250	94,6
WS1040-0866		6	485	555	12	22	265					99,2
WS1040-L	400-L	5	420	480	20	17,5	285	157	7,5	55	250	100,9
WS1040-L-0866		6	485	555	12	22	285					105,5

Explanation

T_{KN} = Nom. Transmissible torque

T_{Kmax} = Max. transmissible torque of the coupling

n_{max} = Max. rotation speed

d_{1kmax} = Max. bore diameter d_1 with keyway acc. to DIN 6885-1

A = Max. outer diameter

D_1 = Outer diameter

D_2 = Outer diameter hub

C_1 = Guided length in hub bore

F_K = Flange thickness

Z = Depth of center value

d_F = Center diameter

D_{PC7} = Pitch circle diameter of bore holes d_7

n_{b7} = Quantity of bore d_7

d_7 = Bore diameter

L = Total length

L_2 = Length on the hub

E = Gap width between left and right component

H_3 = Length of damping module

d_{be} = Inner diameter elastic intermediate ring

Gw_{ub} = Weight, unbored

Ordering example

Identifier	Size	d_{1k}	Further details
WS1036-0750	**360**	**150**	*

*) Without any other specification, we deliver as a standard: with set screws and keyway acc. to DIN 6885-1, keyway side fit P9, bore tolerance H7

Further information on
RINGFEDER® TNS SX
on **www.ringfeder.com**

Disclaimer of liability
All technical details and notes are non-binding and cannot be used as a basis for legal claims. The user is obligated to determine whether the represented products meet his requirements. We reserve the right carry out modifications at any time in the interests of technical progress.